Tachograph

user's Guide

love Car, love life

Download Viidure on Google Play and Apple APP Store

Viidure

Product Installation

1.Install the Anti-static Film

Install the anti-static Im in the dotted area indicated in the gure.Please select a smooth and clean area(other than edges) to ins tall the anti-static Im.Wipe the installation area before installation, and fully compress the air bubbles.

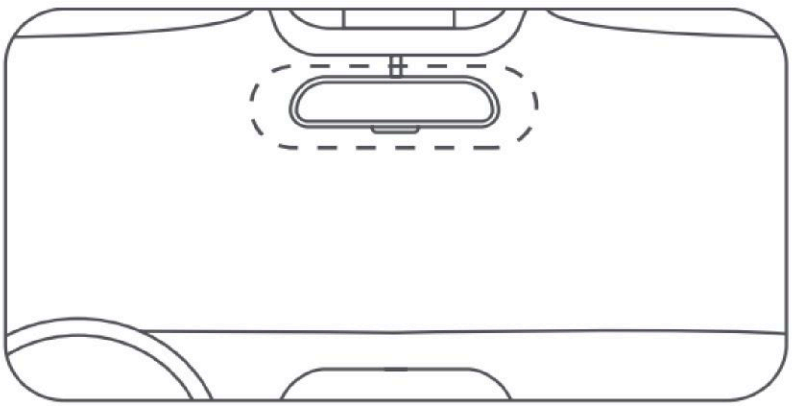

2.Install theSD Card

Insert the TF card into the TF card slot until you hear a "click" sound.

3.Attach the dash cam

Remove the protective Im from the heat-resistant adhesive paper on the base of the holder, and attach the dash cam to the dashed box of the anti-static Im.

Please press the base of the holder by hand to ensure a tight t between the heat-resistant adhesive paper and anti-static lm.

*The bracket adopts a detachable design.

4.Route Cables and Connect to Power Outlets

As shown in the gure, route the power cords along the front of the car, the A-pillar , and the storage boxoftheco-driverseatto the vicinityofthecigarette ligter, connect to the car charger, and then insert the cigarette lighter.

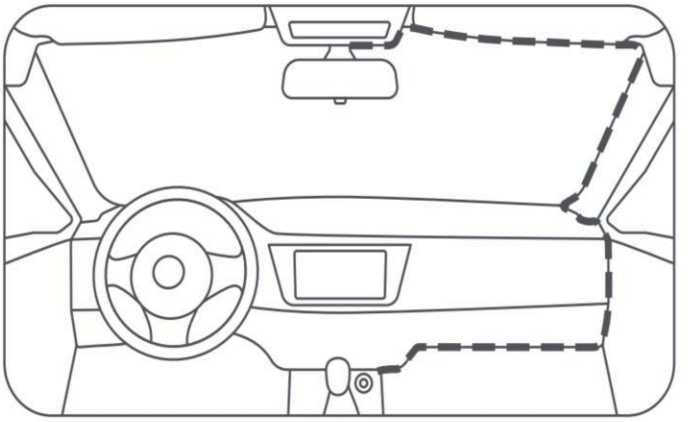

Note: the location of the cigarette lighter may vary from vehicle to vehicle, and the above figure is for reference ony.

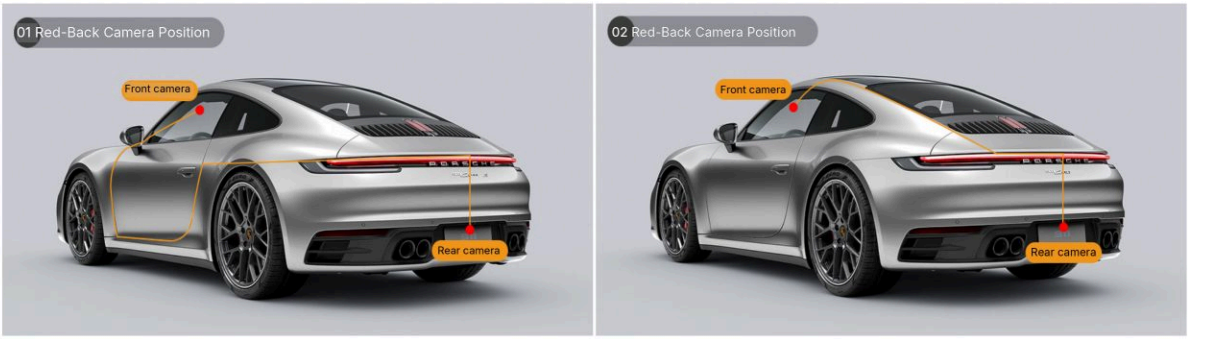

Note: 1080P Rear Camera With 6 Meters Cable(Optional)

Warning: Because of the different models,please let the professional help you toinstall, this method is only for reference.

High-definition tachograph

Instructions for use

Thank you for purchasing the appearance of fine high-resolution multi-function onboard recorder.This product uses high-performance chips,High-definition video, dynamic picture of the continuity of strong,under low light, can record video, To achieve high-definition wide-angle shot.

This user manual details how to use, and provide you with detailed information, including the use, Operational and technical specifications, please read the manual carefully and fully understood before using,please keep this manual Book,we hope that this product will meet your needs and long-term service to you!

Product manual

Introduction to main functions of mobile app.

1.Download app.

App loading can be performed in two ways:

1)Go to the app store to download.

For IOS system, you can search" Viidure" in the app store to download:

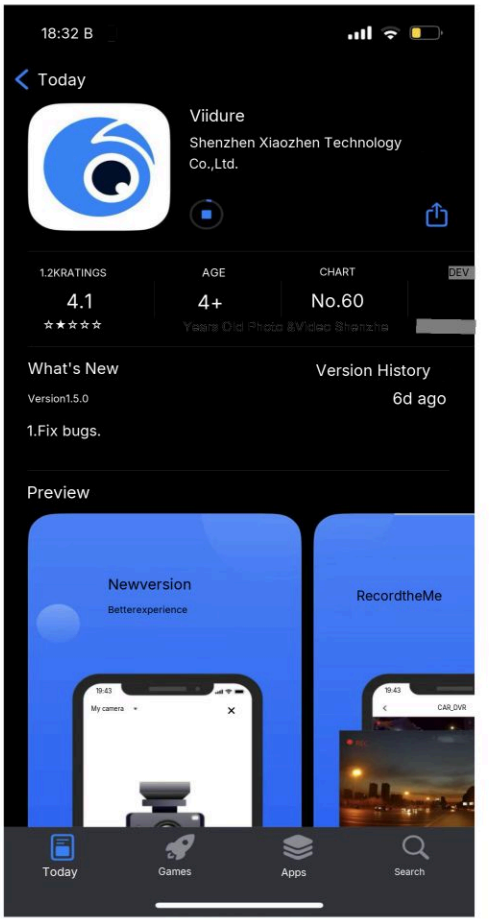

2) Scan the QR code for IOS and Android systems, which can be downloaded by scanning the QR code"Viidure"APP.The steps are as follows:

1) Open the software with "scan" function to scan

2) Select the corresponding system of the mobile phone and click to download

2.Registered account

1)Enter the "Viidure" app for account registration.

2) Fill in the corresponding information as required,obtain the verification code and fill in it.Click registrationto complete the operation.

3.Connecting the camera

1) Enter the mobile phone wifi list (as shown in the figure below), click "car-★ - to enter the recorder device name, enter the password " 12345678" , and the mobile phone is successfully connected to the recorder;



2) Log in to the downloaded app, 1 Viidure" enters the main interface, click the camera icon above "CAR-★* to enter the recorder screen;



4.Parameter setting

Set the parameters of the dash cam, such as modifying the WiFi password, recording or not, and displaying the watermark time,Video cycle time, collision sensitivity, video resolution, etc.

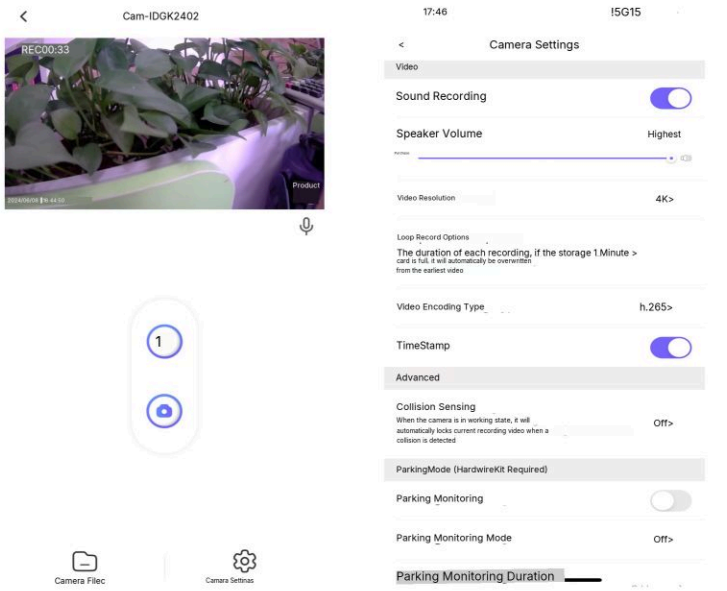

5.Parking monitoring (Optional)

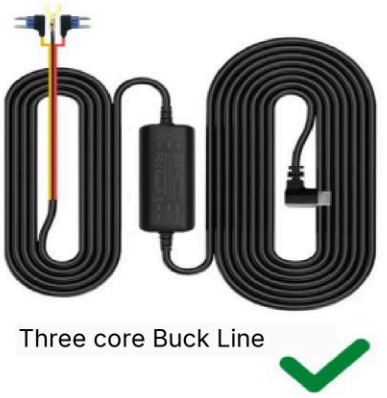

Three core Buck Line



Two core Buck Line ×

The parking monitoring mode requires a three core step-down wire connection, and ordinary car chargers cannot trigger this function!

Parking monitoring function triggered - time setting for time-lapse recording cycle: 12 hours, 24 hours, 48 hours, (set a 12-hour time, and the machine will automatically shuts down after continuously recording for 12 hours triggering the parking monitoring function) Low voltage protection settings: 11. 2V,11.5V,11.8V(When11.2V is set,the machine will automatically shut down when the car battery voltage is lower than 11.2V)

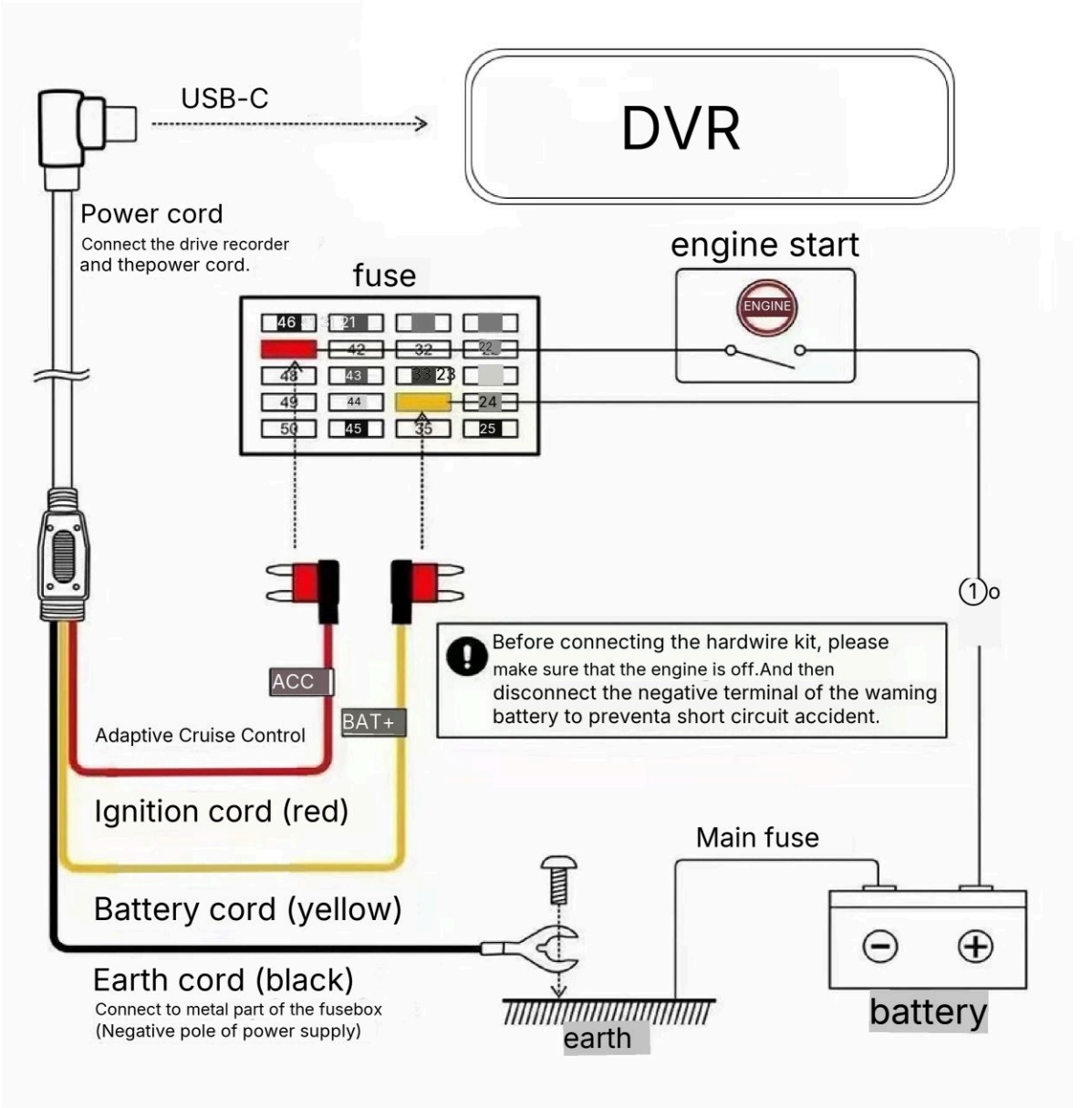

-Instructions for installation-

Stop the engine.

② :Open the fuse box.

③ :Use a power detector to detect the constant power and ACC power (emergency power).

*note: Use an ACC power supply of 12V to 24V.Use a constant power supply below 30A.

④:Connect the yellow fuse to the constant power source, the red fuse to the ACC power source, and the ground terminal (black wire) to the metal part of the body.

6.video review and download

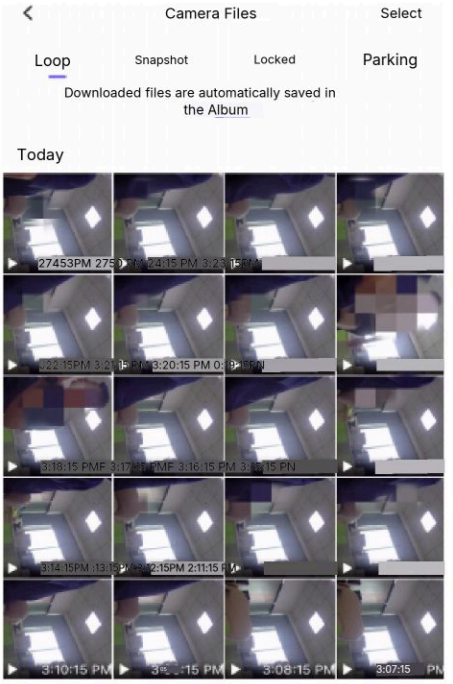

Product description

Key function description

1:power key 2:Reset key 3:TF card slot 4:Type-C interface

Key function description:

1. power key

On / off function

In the shutdown state, long press the [power key] for 2 seconds to turn on the power supply of the machine, and the machine will start working automatically.

Press and hold the [power key] for2 seconds when the machine is turned on.The machine will automatically save the video file and user settings and shut down.

2.Reset key

Press the reset key to reset the machine and restart it when the machine crashes and cannot be switched on or off normally.

3.Tf card slot

Used to insert a memory card,[note] please use a high-speed TF Card (class10 or above) with a capacity of no less than 8GB.The TF card can support 128GB at most.

Product Specifications

product name	Car driving recorder
Features	WiFi dash cam
Colour	custom made
Camera lens	High-resolution ultra wide-angle Camera lens
Language	English, Japanese, French, Italian, German, Spanish, Thai Russian, Chinese (simplified Traditional), Korean, etc.
file format	MOV/MP4
Continuous loop recording	Seamless loop recording, do not leak seconds
Motion detection	Support
Year Month Day points	Support
Carrier media	Built-in memory (total: 64MB)
Camera mode	800W
Photo format	JPEG
Storage card	TF Card(recommended more than 10-speed, capacit and 8G-256G TF card
Microphone	Support
Built-in audio	Support
Infrared night vision	Support
Power Interface	5V 1.5A

Troubleshooting:

Under normal operating conditions, if the products have problems,please refer to the solution:

1: Could not take photos, video Check TF card whether there is enough space, whether locked.

2: When recording, it will automatically stop Because of huge high- definition video data, use SDHC compatible high-speed TF card, high-speed TF card will be C10 identity.

3:Replay pictures and videos, the "File" prompt An error occurred when TF card memory data, resulting in incomplete files, use the Car DVR "Format" function, reformat the card.

4:The image is foggy Pleasecheck the lens for dirt and finger prints.Before shooting, wipe the lens with lens paper.

5:The recorder does not work.You can press the reset key with a sharp object and then start it again to restore normal.

6:Open the network access permission for the first time, and open the local photo album.

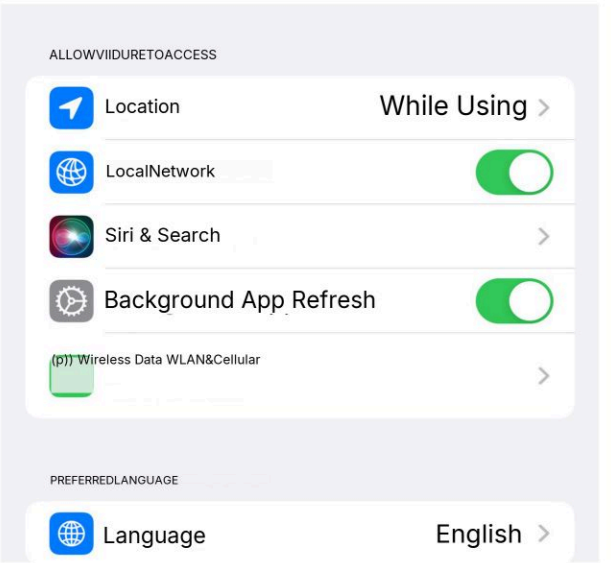

7:If the mobile phone cannot be connected to the product, first of all, check whether the mobile phone is connected to other WiFi hotspots.The app can only be connected to the recorder when the WiFi in the mobile phone settings is connected to the recorder (for example, at home, it is found that the recorder cannot be connected, so it is necessary to check whether the WiFi signal in the mobile phone settings is connected to the WiFi in the home

8:The real-time picture of the mobile phone is stuck, which is generally related to the WiFi signal.For example, when the mobile phone istoo far away from the recorder, the WiFi signal is weak, andthe real-time pictureof the mobile phone willget stuck.Inaddition if there aretoo many WiFisignals around the recorder, it will also interfere withthe recorder and cause the real-time picture to jam.
9:The preview speed in the album is very slow.It may be that there are too many video files in the TF card,resultingin the timeout ofobtaining ile information.Consumers are advised to format TF cards regularly.
10:record appearance many clients connect to it.But only one mobile phone can be used to link at the same time.If it is found that the mobile phone cannot be connected to the recorder, it should be ruled out whether the recorder is connected to other mobile phones.
11:Use the computer to play video recordings: The product uses H. 264 compression format The file type is TS or MP4 format.Many Microsoft Windows computers' built-in playback software bodies (such as Windows Media Player) do not support H.264 encoding format It may not be able to play, or the playing of the movie is not smooth, the frame is fixed or broken, or the video and audio are not synchronized.It is recommended to download other professional playing software (such as potplayer, etc.).

User Guide of Power Supply

*The dash cam uses thecar cigarette lighter as the power supply.To ensure astable power supply, please use theoriginalcarcharger and powercord.The manufacturershal not be held liable for any loss caused by your using any power supply other than the car cigarette lighter, or using any non-original car charger or power cord.
*Some vehiclestillsupplypowertothecigarette lighteraftertheengineisstalled.Long duration of work of the dash cam may cause excessive power loss of the vehicle battery.If the parking monitor function is not enabled, please turn off the dash cam manually or disconnect the car charger from the vehicle after stalling the vehicle.Then you will need to turn on the dash cam manually after the vehicle is started next time.The manufacturer shal not be held liable for any losscaused by your failure to turnoff the dash cam manually.
*ForvehiclsthatlsupplieowertotheciartelihterarthenieisstF
the parking surveillance function is enabled and the vehicle is about to be parked for a long time, please disconnect the car charger from the vehicle to prevent unnecessary power loss of the vehicle battery.

Precautions before Installation

*To ensure correct installation, please use the supplied accessories in the specified manner.

If you use non-supplied or incompatible accessories, they may damage the internal parts of this product, or they may become loose and cause this product to fall off.

*DO NOT install this product at a hot or humid location, such as:

-Near the heater, airvents or air-conditioning vents; or

-Locations that may be exposed to rain, for example, near the vehicle door.



WARNING DO NOT install this product at locations that block the driver's view, compromises the performance of any operating system or safety function of the vehicle, including airbags and hazard light switch, or compromises the driver's ability to operate the vehicle safely.

*DO NOT install this product in front of or at sides of the dashboard, vehicle dooror pillar where one of the airbags may unfold.Please refer to the User Manual of your vehicle for the unfolding area of the front airbag, in order to prevent product failure and personal injury.

FCC RF Exposure Warning Statements:

NOTE: This equipment has been tested and found to comply with the limits for a Class B digital device, pursuant to part 15 of the FCC Rules.These limits are designed to provide reasonable protection against harmful interference in a residential installation.This equipment generates uses and can radiate radio frequency energy and,if not installed and used in accordance with the instructions, may cause harmful interference to radio communications.However, there is no guarantee that interference will not occur in a particular installation.If this equipment does cause harmful interference to radio or television reception, which can be determined by turning the equipment off and on, the user is encouraged to try to correct the interference by one or more of the following measures:

-Reorient or relocate the receiving antenna.

-Increase the separation between the equipment and receiver.

-Connect the equipment into an outlet on a circuit different from that to which the The receiver is connected.

-Consult the dealer or an experienced radio/TV technician for help.

Important:Changes or modifications not expressly approved by the party responsible for compliance could void the user's authority to operate the equipment.

This device complies with Part 15 of the FCC Rules.Operation is subject to the following two conditions:

(1) this device may not cause harmful interference, and

(2) this device must accept any interference received, including interference that may cause undesired operation.